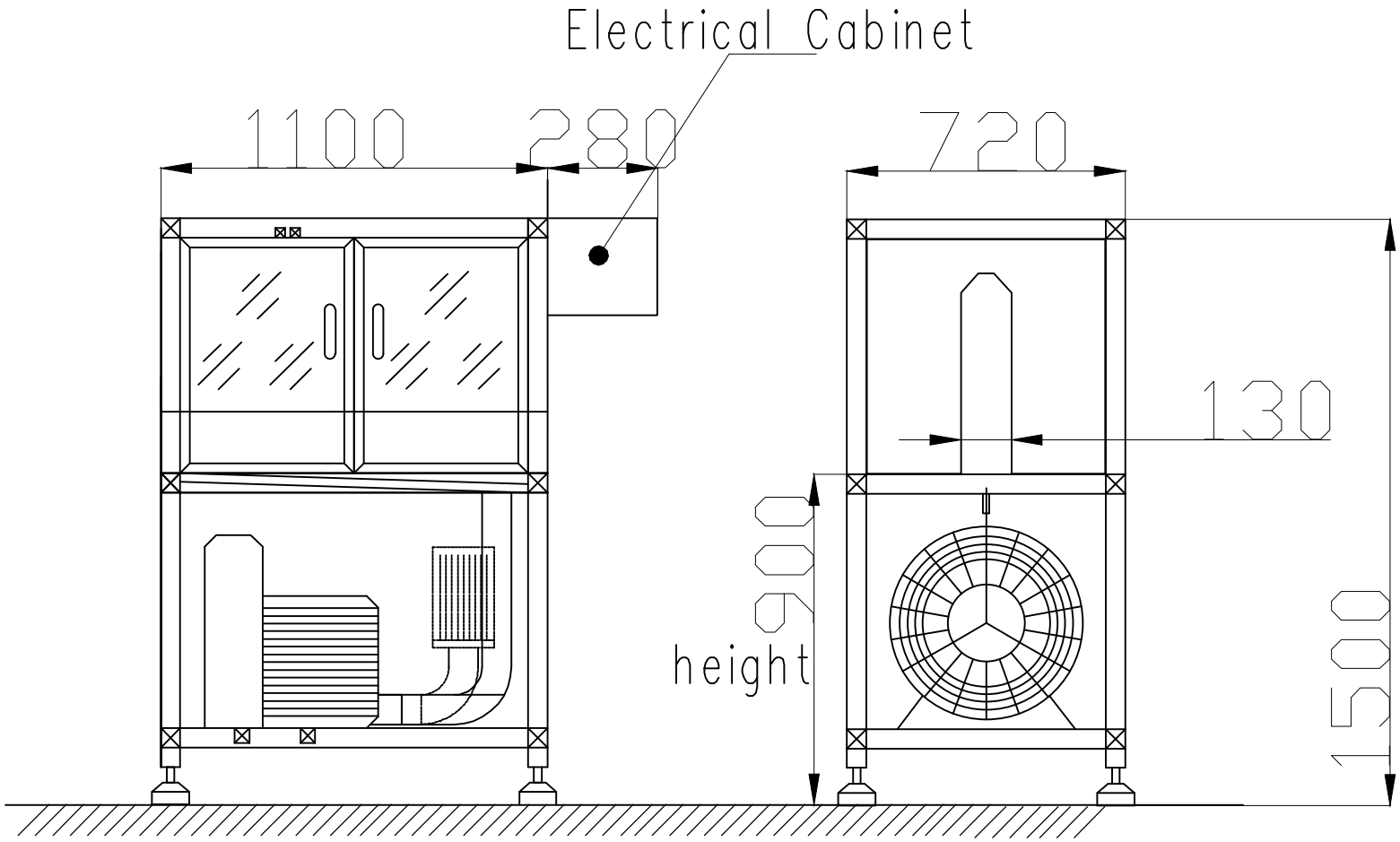
Electrical Cabinet
1100
280
720
130
900
height
1500